Technical data sheet

Clamp clip, single, FT plastic pressure trough

Item number: 1175467

Suitable for all C profile rails with slot width 18 mm and 22 mm.

Polypropylene pressure trough, halogen-free, colour light grey RAL 7035.

HALOGEN FREE | CE | U | 18 | 22

St Steel

FT Hot-dip galvanised

Master data

Item number	1175467
Type	2056U 46 FT
Description 1	Clamp clip
Manufacturer	OBO
Dimension	40-46mm
Material	Steel
Surface	Hot-dip galvanised
Surface standard	DIN EN ISO 1461
Smallest sales unit	100
Unit of quantity	Piece
Weight	10 kg
Weight unit	kg/100 pc.
CO2 Footprint (GWP) Cradle-to-Gate	0,1701 kg COe / 1 Piece

Technical data sheet

Clamp clip, single, FT plastic pressure trough

Item number: 1175467

Dimensions

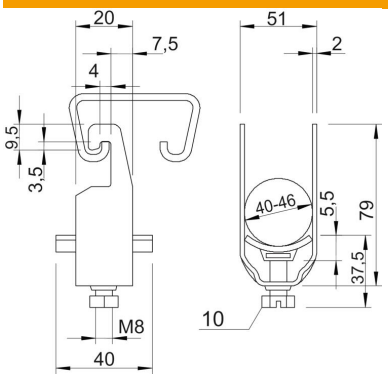

Dimension A	20 mm
Dimension B	51 mm
Dimension C	40 mm
Dimension G (mm)	M8
Dimension H	79 mm
Dimension L	37.5 mm
Dimension t	2 mm
Dimension x	5.5 mm

Technical data

Number of cables/pipes	1
for 1 cable H	79 mm
for 1 cable L	37.5
for 2 cable H	128 mm
for 2 cable L	44.5 mm
for 3 cable H	177 mm
for 3 cable L	56.5 mm
For pipe diameter, max.	40 mm
For pipe diameter, min.	40 mm
for rail with slot width (with interval), max.	22 mm
for rail with slot width (with interval), min.	18 mm
Halogen-free	yes
Max. Tightening torque	5 Nm
With plastic trough	yes
With metal trough	no
Mounting type	Profile rail
ROHS-conformant	yes
Impact-resistant	no
Clamping range D, max.	46 mm
Clamping range D, min.	40 mm
Surface addition	hot galvanised
Material addition	Steel
With counter-trough	no
Material of trough	Plastic
Material quality of trough	Polypropylene