Technical data sheet

Height-adjustable, decouplable cassette for inspection opening, stainless steel
Item number: 7409650

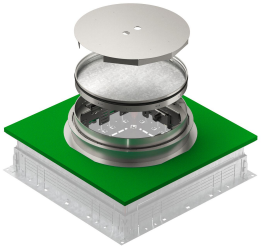

Height-adjustable and decouplable round cassettes are suitable for flushfloor device installation in UGD-3 underfloor connection boxes. Depending on the design, they are suitable for dry, moist or wet-cleaned floors. The cassette rests on the fixing bracket fastened in the top frame of the box, using which the cassette can be adjusted to the top edge of the floor covering. The fixing bracket decouples the cassette from the raw ceiling. The connection socket must have an appropriate installation opening and, for this reason, needs a blanking lid with an appropriate installation opening. The cassettes are made from stainless steel or brass. All the cassettes contain a 4 mm thick sheet steel plate, for safe absorption of the traffic loads. The cassettes are available for different floor covering thicknesses of 20 and 25 mm. Only suitable for smooth floor coverings. Height-adjustable cassette with blanking cover. The delivery includes a screed protection lid made from aluminium (can be sanded), a matching mounting lid for fixing the cassette tube body and an ISO apron for the decoupling of the underfloor connection socket.

A2 Stainless steel

Master data

Item number	7409650
Type	TRKRN 9 VS 350
Description 1	Cassette for seamless floors
Description 2	round, blank
Manufacturer	OBO
Dimension	Ø304x85
Material	Stainless steel 1.4301
Smallest sales unit	1
Unit of quantity	Piece
Weight	833 kg
Weight unit	kg/100 pc.

Technical data sheet

Height-adjustable, decouplable cassette for inspection opening, stainless steel
Item number: 7409650

Dimensions

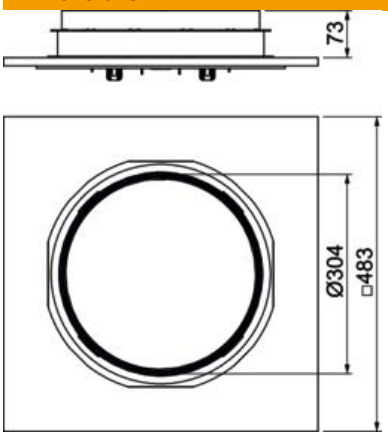

Technical data

Number of installable devices	0
Number of cable outlets	0
Cover version	Round
Cable outlet version	No cable outlet
Floor care	Wet
Decouplable	yes
Floor height, min.	140 mm
Suitable for raised floor installation	no
Suitable for cavity floor installation	no
Suitable for	Underfloor socket structure
Suitable for underfloor box	350
Device support to accept mounting boxes	no
Nominal size for device installation units	R9
Height-adjustment range, max.	113 mm
Height-adjustment range, min.	73 mm
Standard	EN 50085-2-2
ROHS-conformant	yes
Protection rating (IP) when used	IP00
Protection rating (IP) when unused	IP44
Protection rating IK code	IK10
Heavy-duty version	no
Installation system type	UT4
Vertical load, large area	to 5,000 N
Vertical load, small area	to 3,000 N
Approvals	VDE
Floor covering thickness	25 mm