# Technical data sheet

## UZD250-4 junction and branch box

## Item number: 7410022

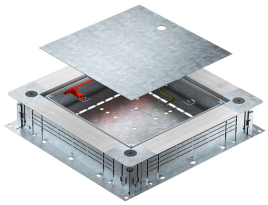

Junction and branch box for screed-covered underfloor installation duct with sheet steel side walls. For mounting of installation units in the mounting cover (to be ordered separately). Can be infinitely adjusted to a nominal screed height of 80–160 mm using the quick height-adjustment unit. The screed can be worked up to be flush with the screed draw-off edge. With noise decoupling option after screed laying and can also be used with system accessories for heavy-duty applications. Insertion of cables with the 2-part EÜK duct.

| | |
|---|---|
| St | Steel |
| FS | Strip galvanised |

### Master data

| | |
|---|---|
| Item number | 7410022 |
| Type | UZD250-4 |
| Description 1 | Junction and branch box |
| Description 2 | for screed height 80-160 mm |
| Manufacturer | OBO |
| Dimension | 400x380x80 |
| Material | Steel |
| Surface | Strip galvanised |
| Surface standard | DIN EN 10346 |
| Smallest sales unit | 1 |
| Unit of quantity | Piece |
| Weight | 466 kg |
| Weight unit | kg/100 pc. |
| CO2 Footprint (GWP) Cradle-to-Gate | 21,9284 kg CO2e / 1 Piece |

# Technical data sheet

## UZD250-4 junction and branch box

## Item number: 7410022

### Dimensions

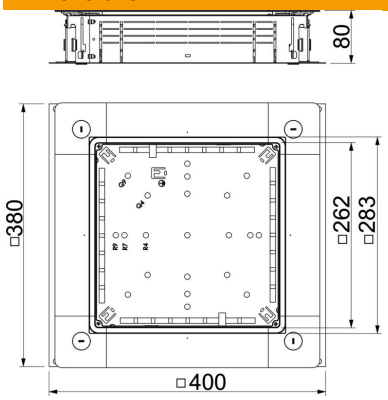


| | |
|---|---|
| Length | 380 mm |
| Width | 400 mm |
| Height | 80 mm |
| Dimension a | 262 mm |
| Dimension A | 380 mm |
| Dimension B | 400 mm |
| Dimension b | 283 mm |

### Technical data

| | |
|---|---|
| Number of installable devices | 1 |
| Floor plate | yes |
| Cover version | Universal |
| Seal installation option | yes |
| Installation opening for on-floor tank | no |
| Installation opening for flush-mount unit | Square |
| Decouplable | yes |
| Screed height, max. | 160 mm |
| Screed height, min. | 80 mm |
| For pipe connection | no |
| Suitable for screed-flush closed underfloor ducts | no |
| Suitable for screed-covered underfloor ducts | yes |
| Suitable for underfloor ducts | yes |
| Trunking width, max. | 250 mm |
| Trunking width, min. | 190 mm |
| Trunking height, max. | 58 mm |
| Duct height, min. | 28 mm |
| Minimum screed height | 80 |
| Nominal size | 250 mm |
| Height-adjustment range, max. | 160 mm |
| Height-adjustment range, min. | 80 mm |
| ROHS-conformant | Exempt |
| Protection rating (IP) when used | IP20 |