Technical data sheet

UZD250-4 R junction and branch box

Item number: 7410026

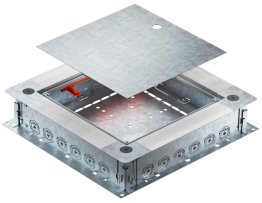

Junction and branch box UZD250-4 R with side walls made of sheet steel. For mounting of installation units in the mounting lid (to be ordered separately). Can be infinitely adjusted to a nominal screed height of 80–160 mm using the quick height-adjustment unit. The screed can be worked up to be flush with the screed edge. With an acoustic decoupling option after screed laying, and with system accessories, it can be used for heavy-duty applications. Insertion of cables through the pipe entries. Pipe entry per side suitable for 6 installation pipes each of the diameters M20, M25 and M32

St Steel

FS Strip galvanised

Master data

Item number	7410026
Type	UZD250-4 R
Description 1	Junction and branch box
Description 2	with pipe entry
Manufacturer	OBO
Dimension	400x380x80
Material	Steel
Surface	Strip galvanised
Surface standard	DIN EN 10346
Smallest sales unit	1
Unit of quantity	Piece
Weight	466 kg
Weight unit	kg/100 pc.
CO2 Footprint (GWP) Cradle-to-Gate	22,1564 kg CO2e / 1 Piece

Technical data sheet

UZD250-4 R junction and branch box

Item number: 7410026

Dimensions

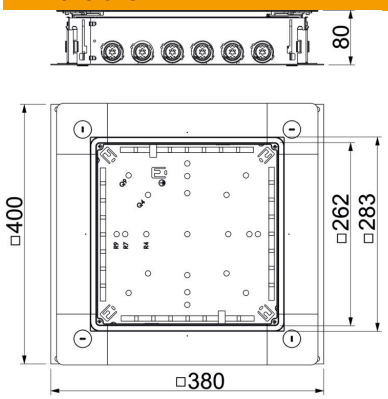

Length	380 mm
Width	400 mm
Height	80 mm
Dimension a	262 mm
Dimension A	380 mm
Dimension B	400 mm
Dimension b	283 mm

Technical data

Number of installable devices	1
Floor plate	yes
Cover version	Universal
Seal installation option	yes
Installation opening for on-floor tank	no
Installation opening for flush-mount unit	Square
Decouplable	yes
Screed height, max.	160 mm
Screed height, min.	80 mm
For pipe connection	yes
Suitable for screed-flush closed underfloor ducts	no
Suitable for screed-covered underfloor ducts	no
Suitable for underfloor ducts	no
Minimum screed height	80
Nominal size	250 mm
Height-adjustment range, max.	160 mm
Height-adjustment range, min.	80 mm
ROHS-conformant	Exempt
Protection rating (IP) when used	IP20