Technical data sheet

Cable gland, metric thread, light grey

Item number: 2022864

Cable gland with metric connection thread in cap nut design, suitable for junction boxes, housings, distributor boxes in private and industrial areas. With strain relief and integrated sealing lip, tested according to DIN EN 62444. Protection class IP68. Can be used between –20°C and +65°C.

650° UV RESISTANT IP 68 M

PA Polyamide

Master data

Item number	2022864
Type	V-TEC VM16 LGR
Description 1	Cable gland
Description 2	fully metric
Manufacturer	OBO
Dimension	M16
Colour	Light grey; RAL 7035
Material	Polyamide
Smallest sales unit	50
Unit of quantity	Piece
Weight	0.614 kg
Weight unit	kg/100 pc.
CO2 Footprint (GWP) Cradle-to-Gate	0,0297 kg CO2e / 1 Piece

Technical data sheet

Cable gland, metric thread, light grey

Item number: 2022864

Dimensions

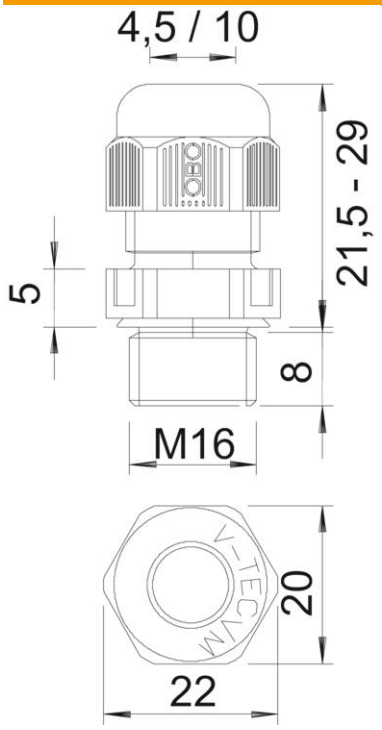

Dimension E	22 mm
Dimension L max.	23.5 mm
Dimension L min.	21.5 mm
Dimension L1	8 mm
Dimension L2	5 mm

Technical data

Type of seal	Sealing ring
Version for	Straight
Bend protection	no
Sealing area D, max.	10 mm
Sealing area D, min.	4.5 mm
explosion-proof	no
Flat cable gland	no
Flame-resistant	acc. to VDE 0471/DIN 695 Part 2-1, test temperature 650°C
For Ex zone	Without
For Ex zone gas	Without
For Ex zone dust	Without
Thread	M16 x 1,5
Thread type	Metric
Thread length	8 mm
Nominal thread size	16
Thread increase	1.5 mm
Fibre-glass reinforced	no
Halogen-free	yes
Unstable torque	2 Nm
Impact category	3
Strain relief category	A
Sealing insert, multiple	no

Technical data sheet

Cable gland, metric thread, light grey

Item number: 2022864

Technical data

With locknut	no
ROHS-conformant	yes
Impact-resistant	no
WAF	20
Protection rating	IP68
Hexagonal corner dimension	22 mm
Splittable gland	no
Permitted temperature range, max.	65 °C
Permitted temperature range, min.	-20 °C
Strain relief option	yes